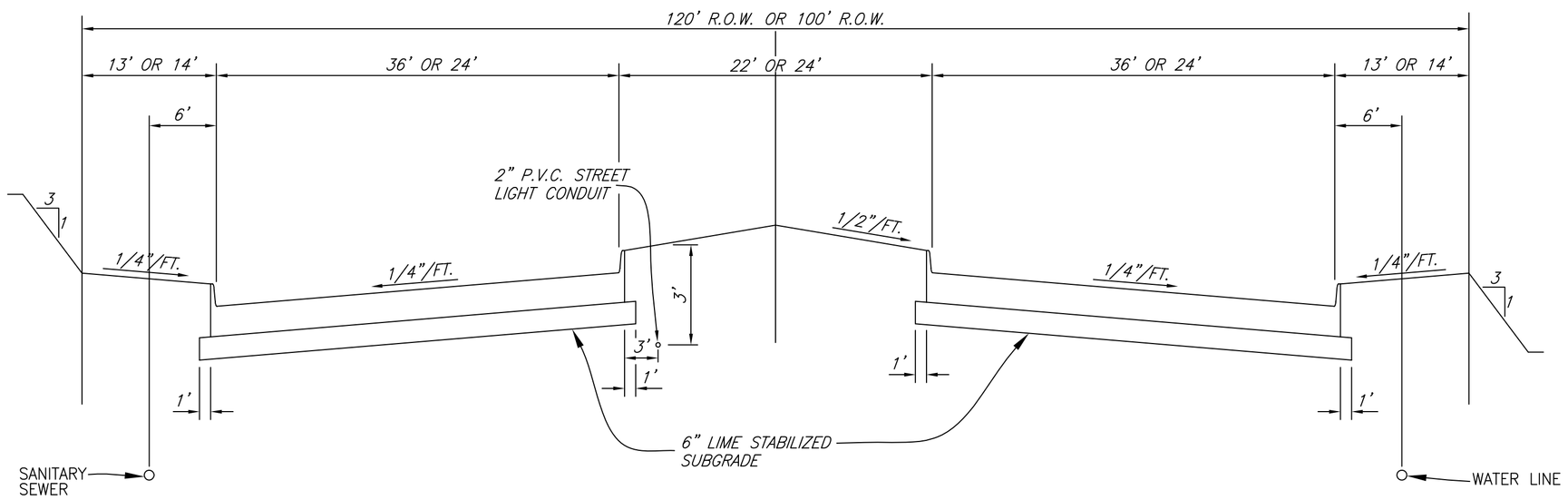

REGULAR SECTION

TYPE B & TYPE C

NOTE:
FOR RIGHT-OF-WAYS LESS THAT 17' BEHIND FACE OF CURB, GAS, ELECTRIC, CABLE TV, FIBER OPTIC, TELEPHONE AND ALL OTHER FRANCHISE UTILITIES ARE LOCATED OUTSIDE THE RIGHT-OF-WAY IN UTILITY EASEMENTS.

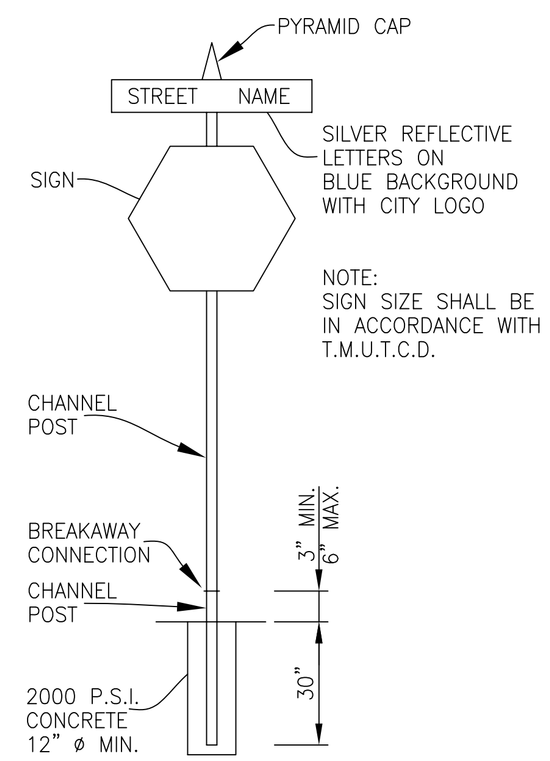

TYPICAL SIGN INSTALLATION

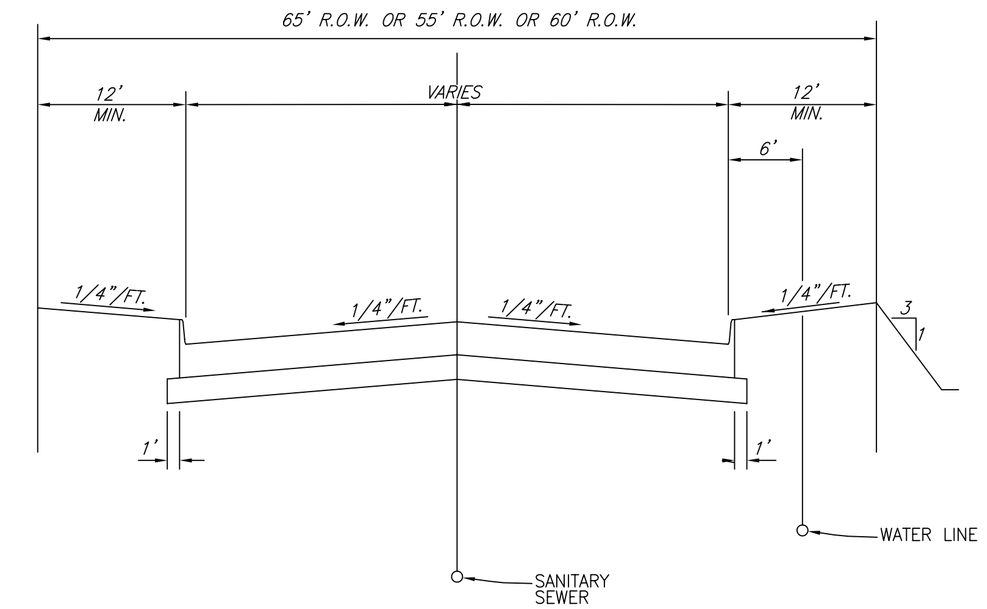

REGULAR SECTION

TYPES D,E & E-1

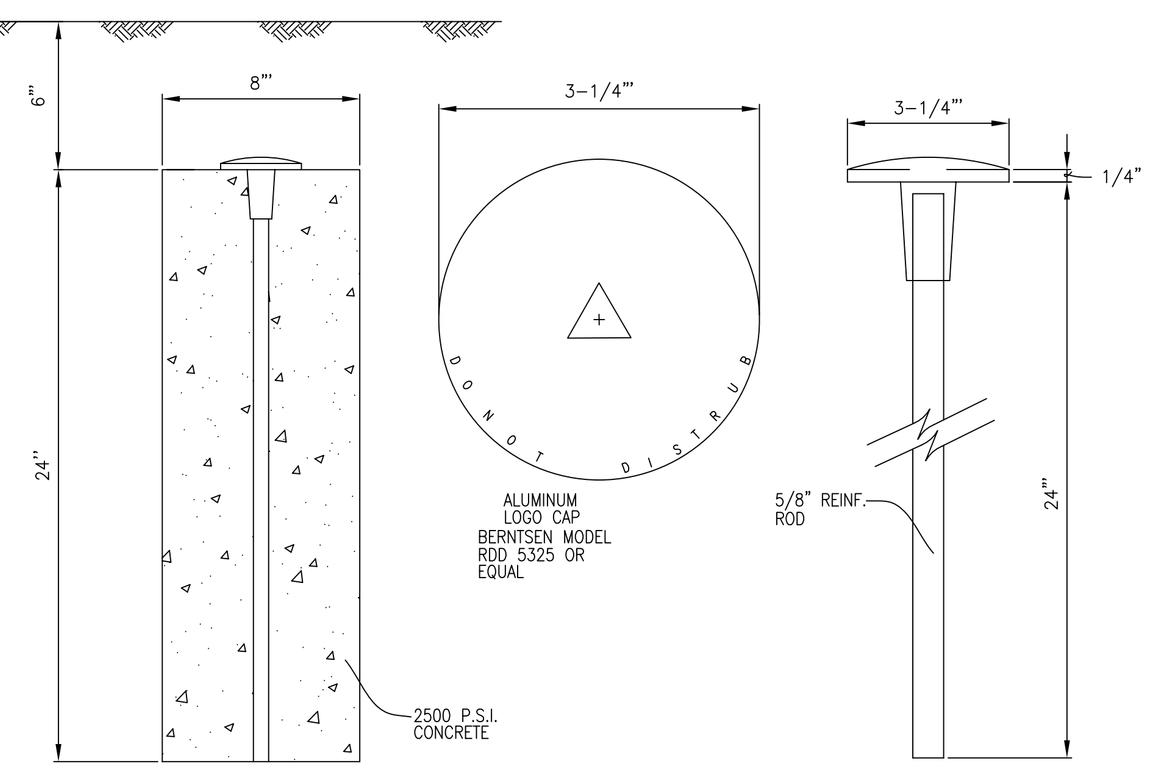

BOUNDARY MONUMENT

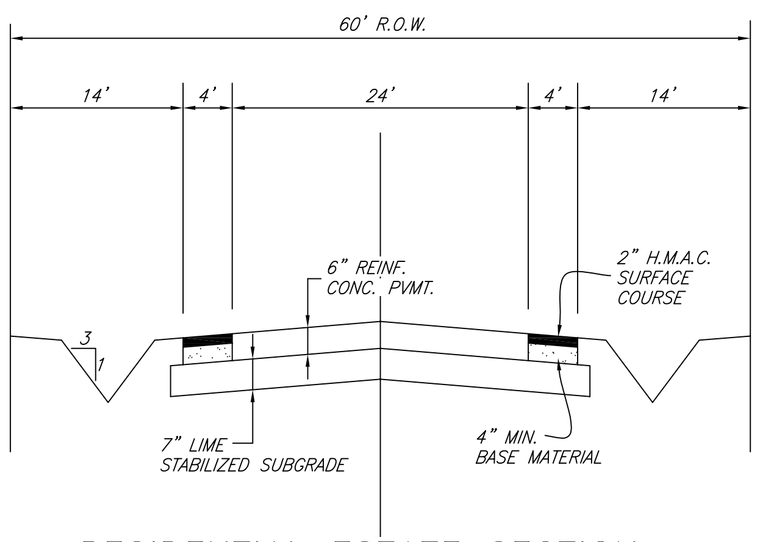

RESIDENTIAL ESTATE SECTION

1. RESIDENTIAL ESTATE SECTION ALLOWED WITH CITY COUNCIL APPROVAL ONLY.
2. MIN. LOT SIZE ONE ACRE.
3. DRIVE CULVERTS AND RETURNS TO BE INSTALLED AT TIME OF DEVELOPEMNET.

NO.	REVISION	BY	DATE

CITY OF WYLIE, TEXAS

STANDARD CONSTRUCTION DETAILS

MISCELLANEOUS

DATE: APRIL, 2005

SHEET STD-24_R