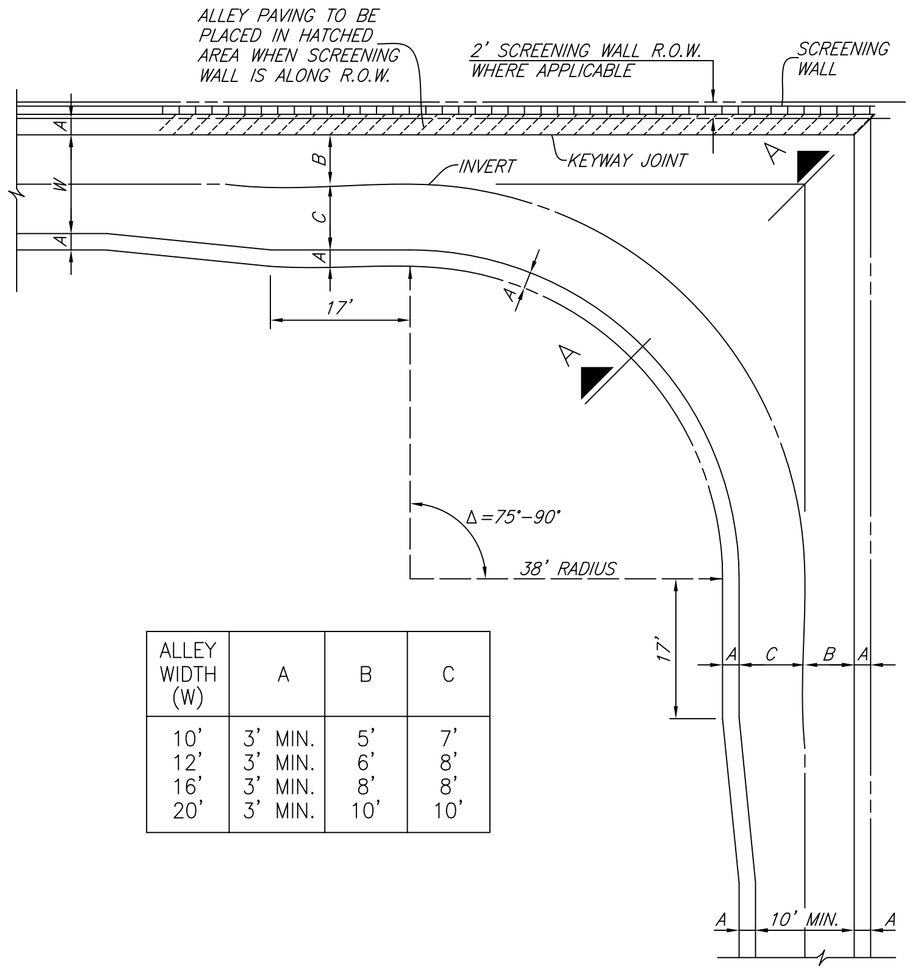

ALLEY WIDTH (W)	A	B	C
10'	3' MIN.	5'	7'
12'	3' MIN.	6'	8'
16'	3' MIN.	8'	8'
20'	3' MIN.	10'	10'

ALLEY TURN FOR Δ = 75°–90°

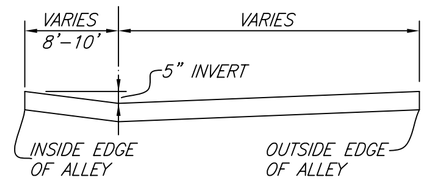

SECTION A–A

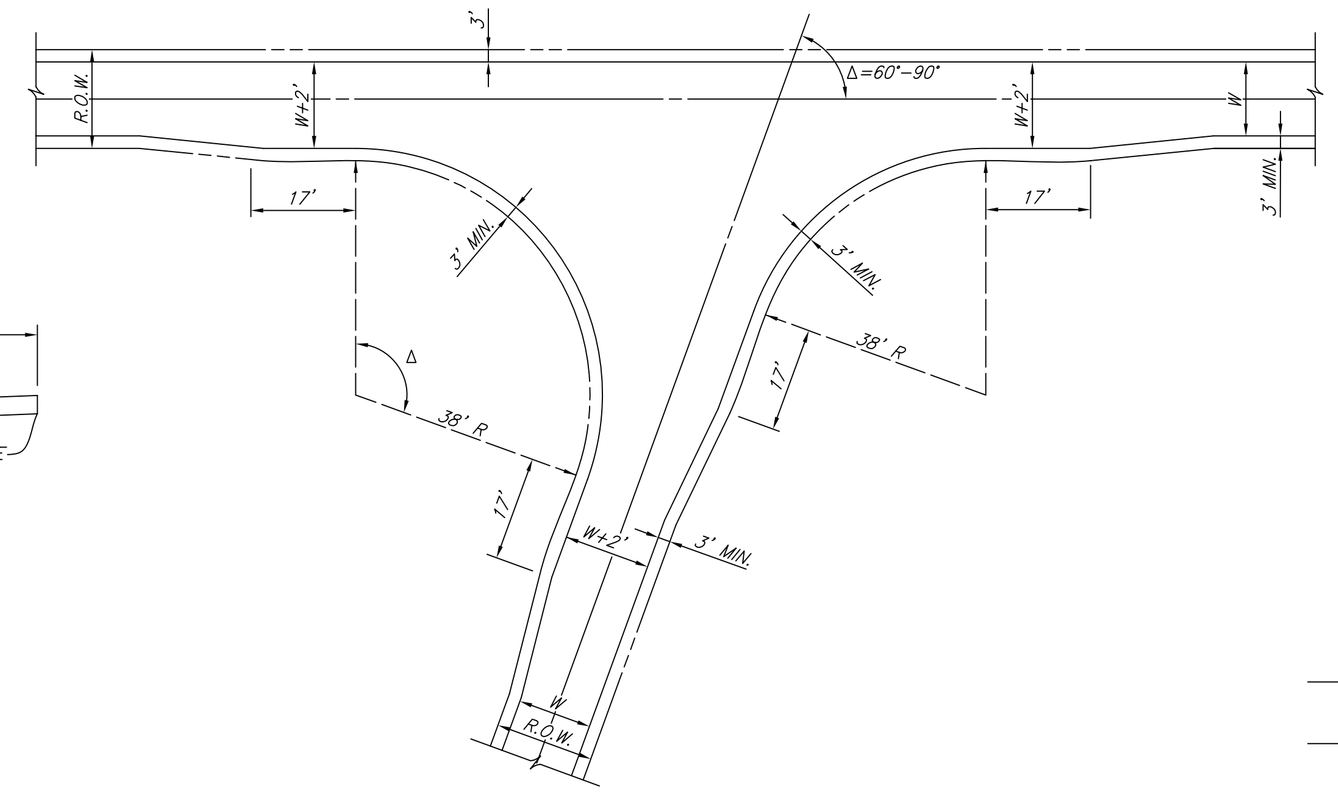

ALLEY TURN FOR Δ > 90°

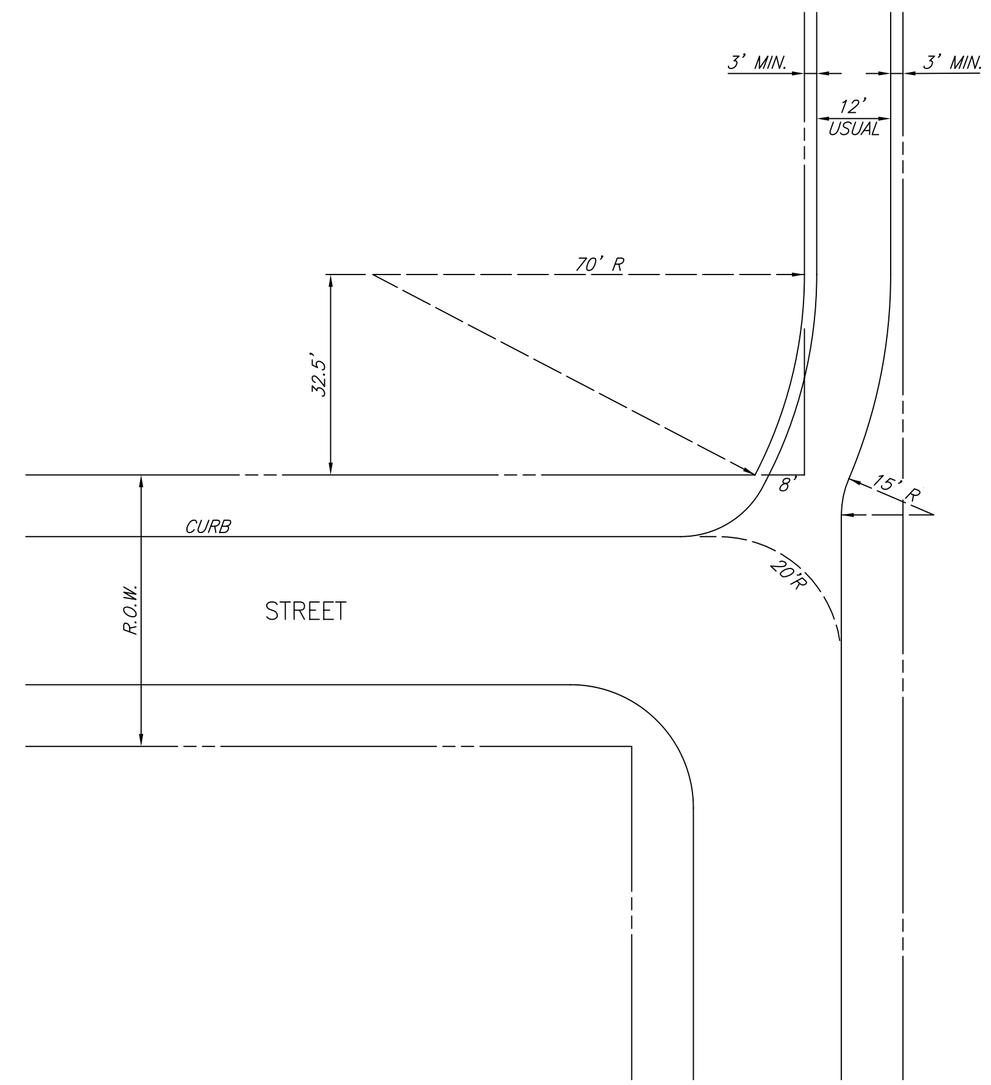

ALLEY / STREET INSERSECTION

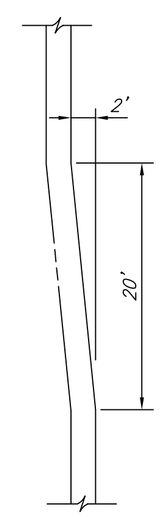

DETAIL "A"

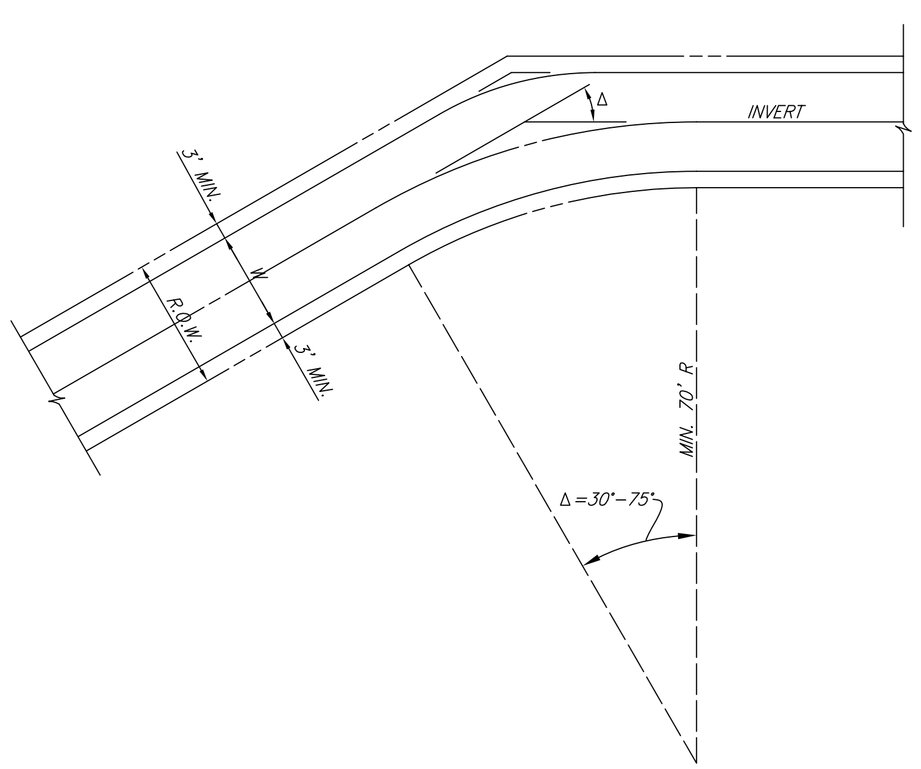

ALLEY TURN FOR Δ = 30°–75°

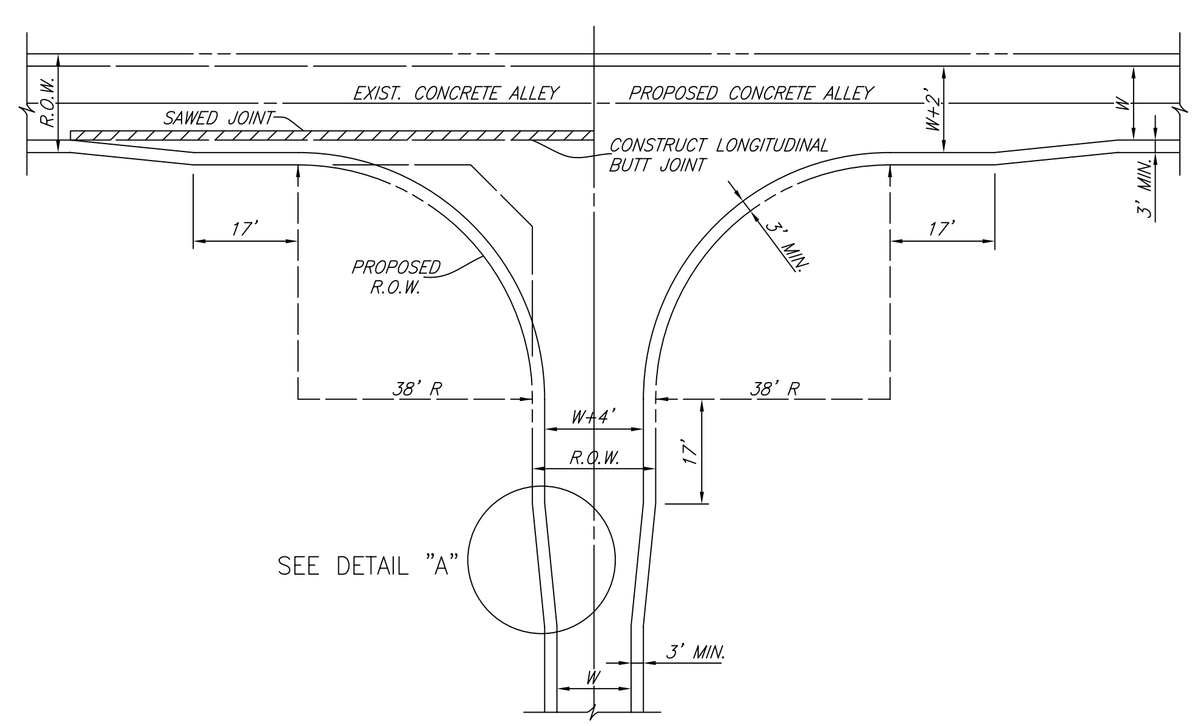

ALLEY INSERSECTING ALLEY

NO.	REVISION	BY	DATE

CITY OF WYLIE, TEXAS

STANDARD CONSTRUCTION DETAILS

PAVING / RADIUS

DATE: APRIL, 2005

SHEET STD–06_R