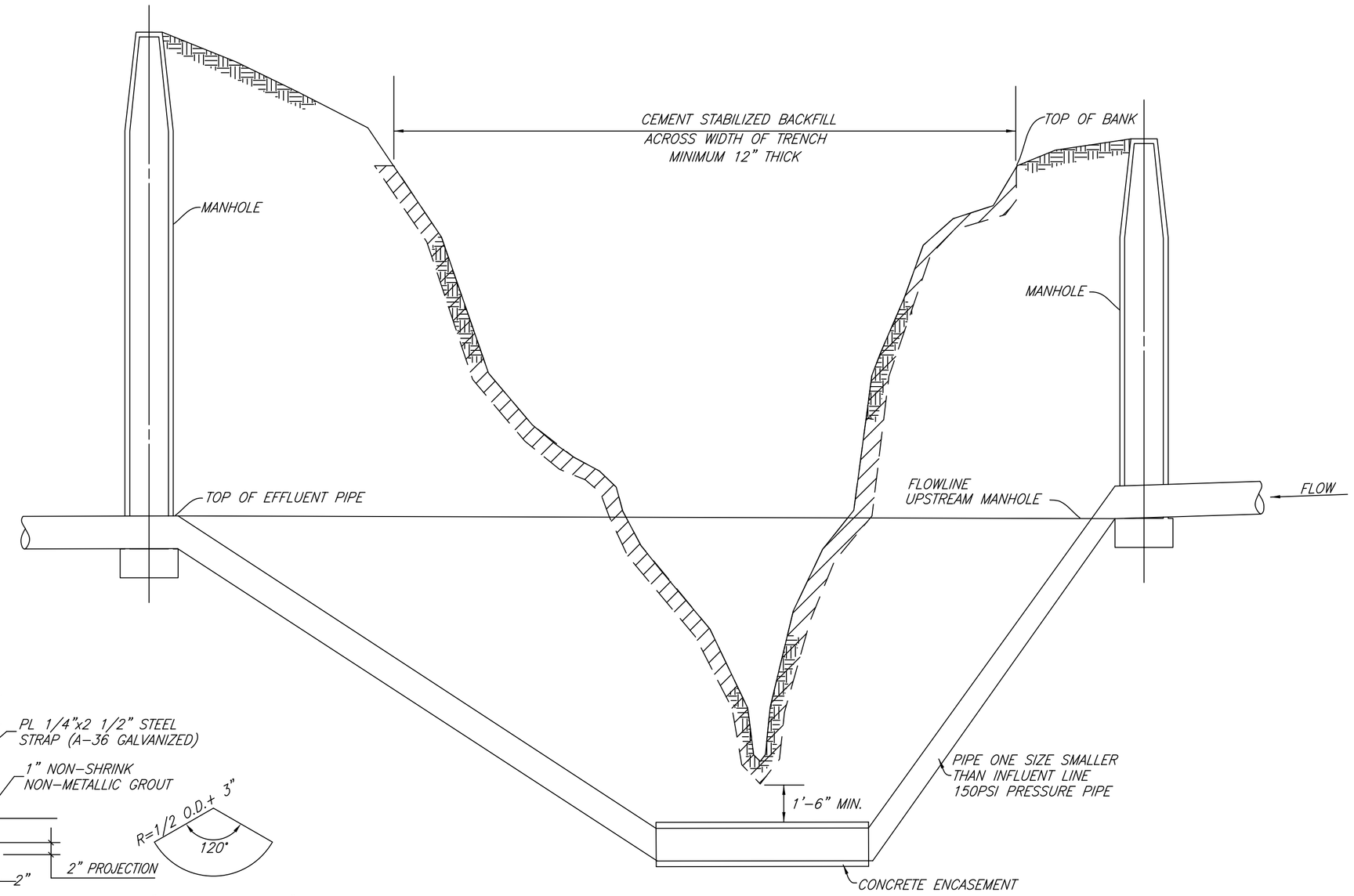

INVERTED SIPHON

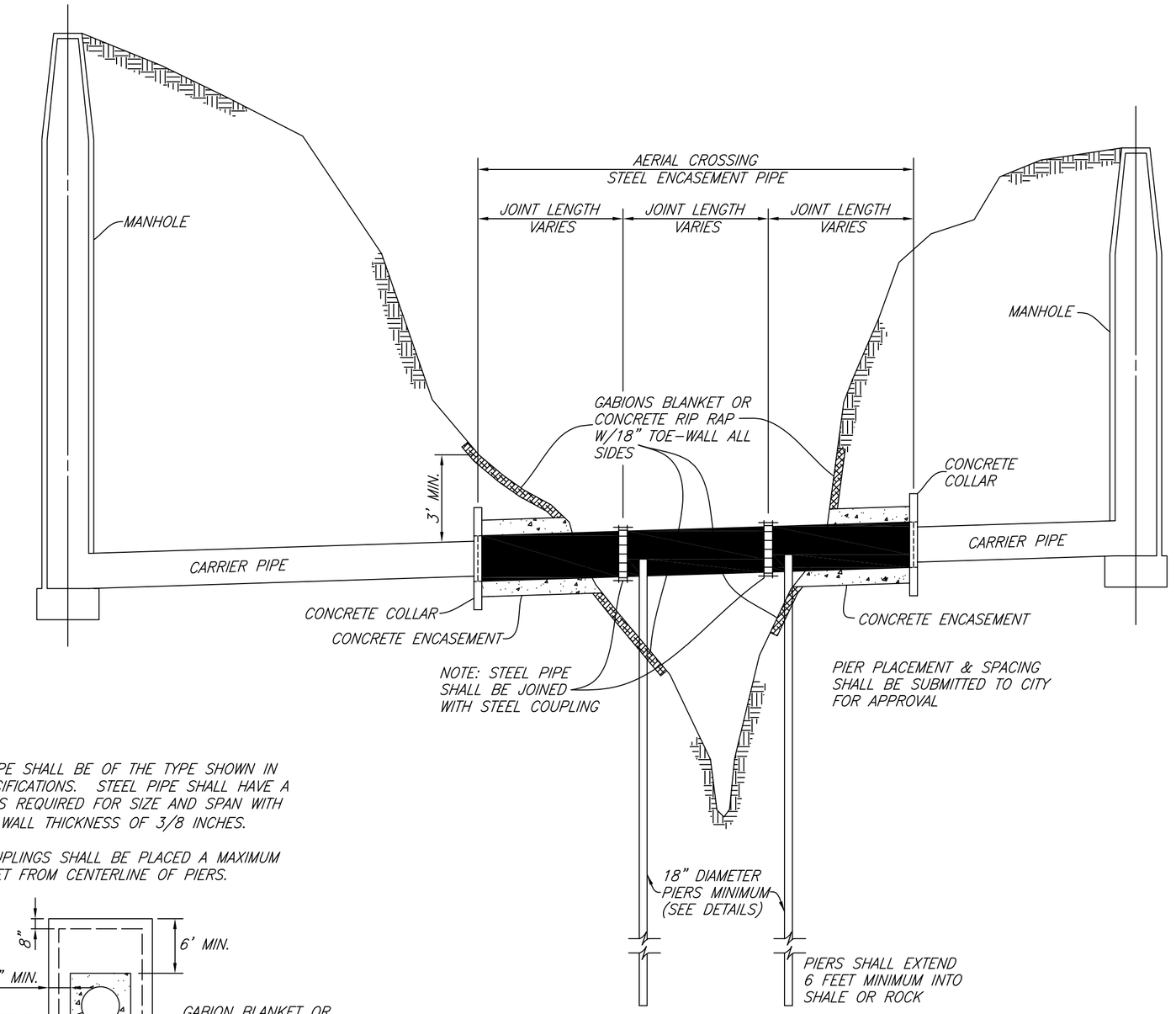

AERIAL CROSSING

STEEL PIPE SHALL BE OF THE TYPE SHOWN IN THE SPECIFICATIONS. STEEL PIPE SHALL HAVE A THICKNESS REQUIRED FOR SIZE AND SPAN WITH MINIMUM WALL THICKNESS OF 3/8 INCHES.

PIPE COUPLINGS SHALL BE PLACED A MAXIMUM OF 5 FEET FROM CENTERLINE OF PIERS.

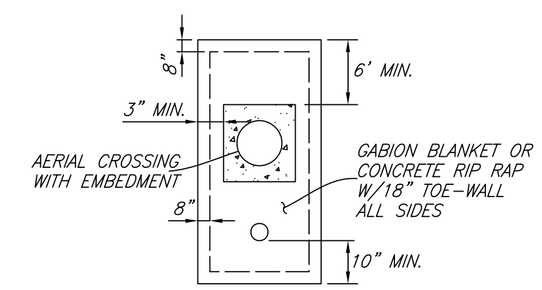

BANK PROTECTION (TYP.)

NOTE:
ENGINEERING DESIGN SHALL BE SUBMITTED TO CITY FOR APPROVAL FOR USE FOR EACH CROSSING. PIERS SHALL BE PLACED AT MAXIMUM SPAN DISTANCE AS DICTATED BY ENGINEER'S DESIGN.

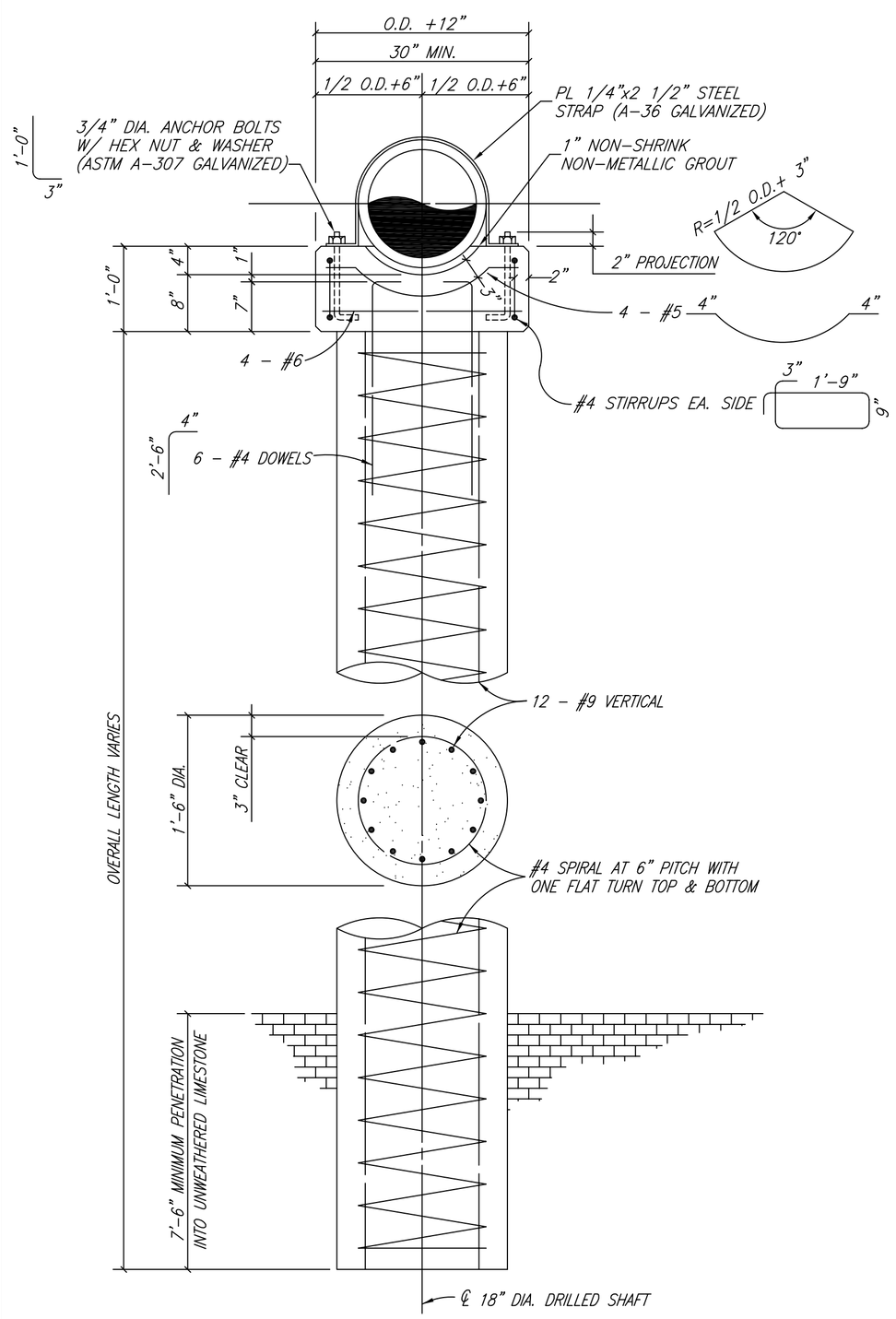

AERIAL CROSSING PIER & PIER CAP

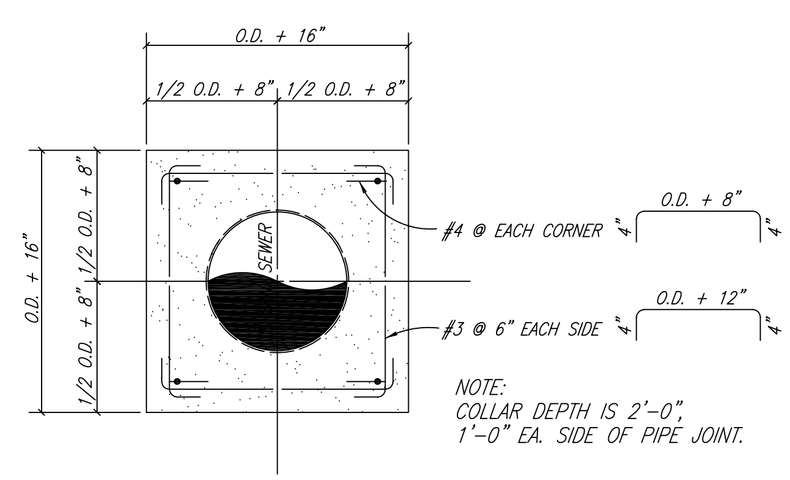

AERIAL CROSSING CONCRETE COLLAR

NO.	REVISION	BY	DATE

CITY OF WYLIE, TEXAS

STANDARD CONSTRUCTION DETAILS

SANITARY SEWER

DATE: APRIL, 2005

SHEET STD-18_R