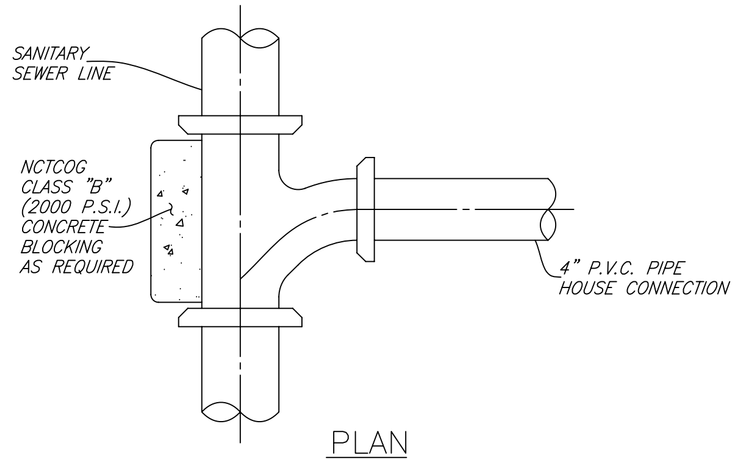

PLAN

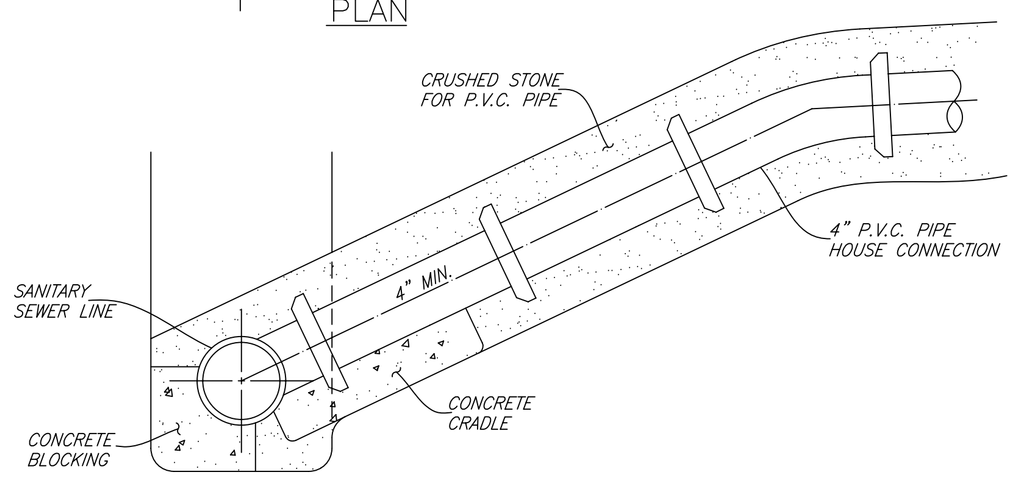

SECTION

TYPICAL SEWER HOUSE SERVICE CONNECTION

SANITARY SEWER CLEANOUT BOOTS SHALL BE BASS & HAYS # 339 OR APPROVED EQUAL.
4" SERVICE LINE SHALL BE SDR26.

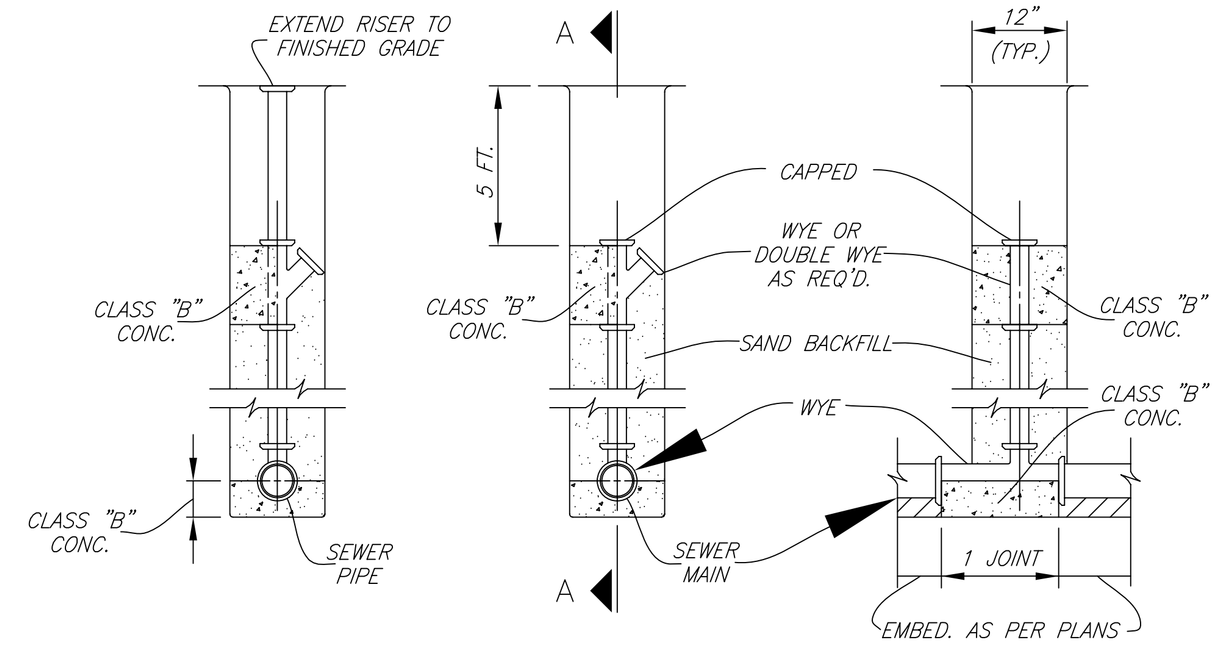

WITH CLEAN OUT

SECTION "A–A"

DEEP CUT CLEANOUT

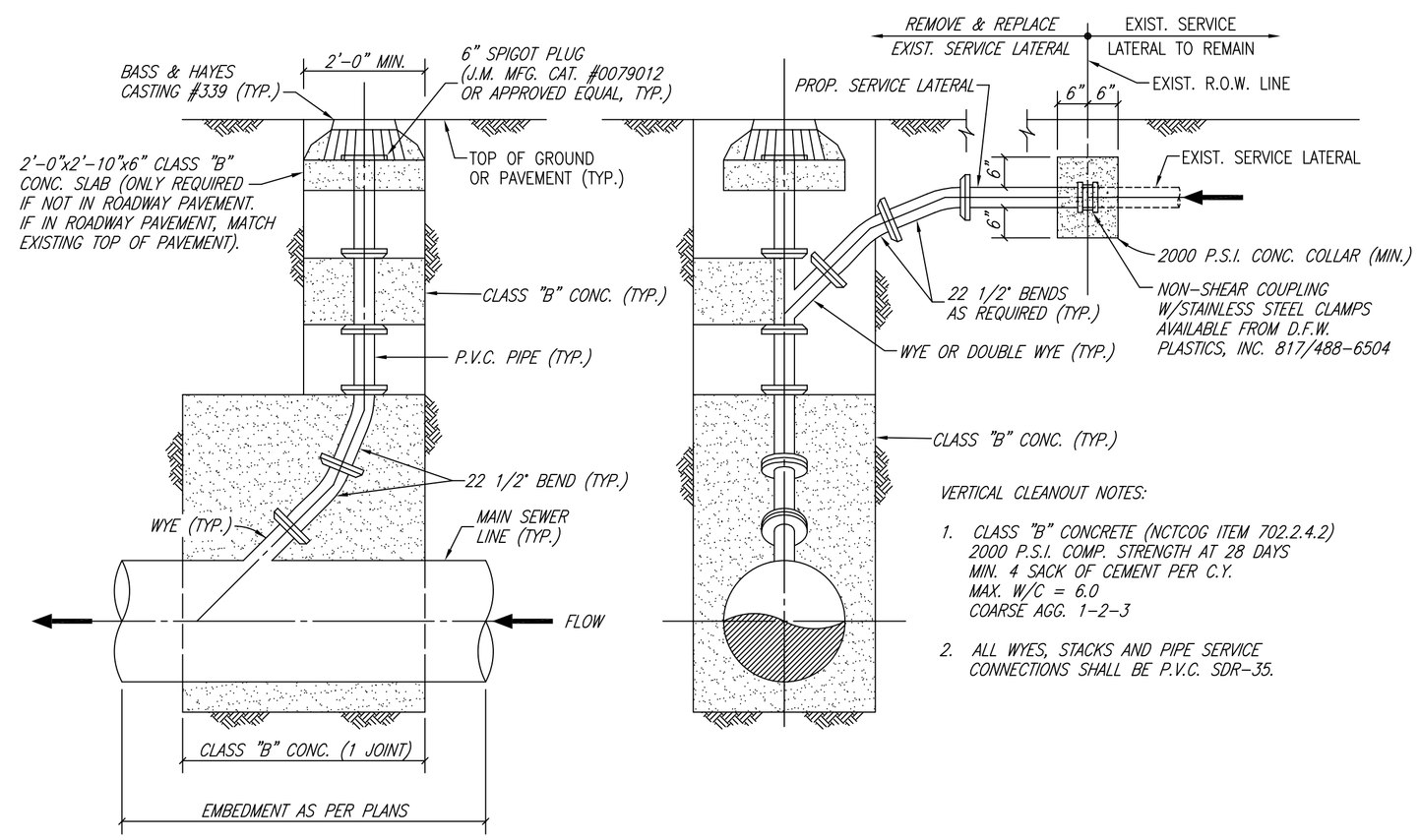

VERTICAL CLEANOUT NOTES:

1. CLASS "B" CONCRETE (NCTCOG ITEM 702.2.4.2)
   2000 P.S.I. COMP. STRENGTH AT 28 DAYS
   MIN. 4 SACK OF CEMENT PER C.Y.
   MAX. W/C = 6.0
   COARSE AGG. 1–2–3
2. ALL WYES, STACKS AND PIPE SERVICE CONNECTIONS SHALL BE P.V.C. SDR–35.

VERTICAL CLEANOUT CONNECTION

(CONNECTION, WYE, CONCRETE, BENDS, CASTING, ETC. ALL SUBSIDIARY TO CLEANOUT)

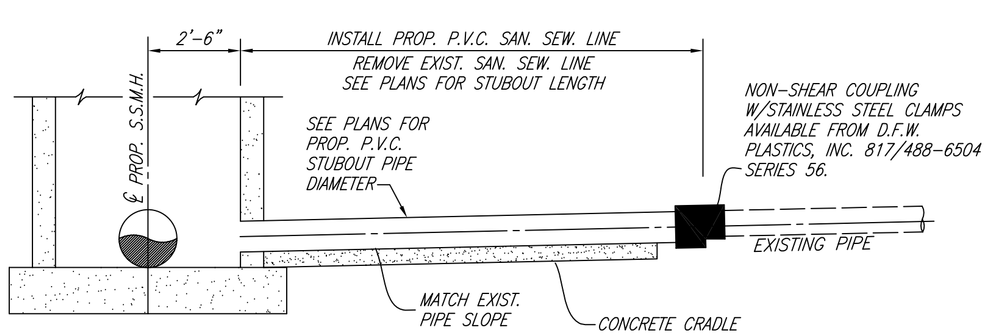

TYPICAL STUBOUT CONNECTION

NO SCALE

NOTE:
MATCH SOFFITS UPSTREAM OF MANHOLE
MATCH FLOW LINES DOWNSTREAM OF MANHOLE

NO.	REVISION	BY	DATE

CITY OF WYLIE, TEXAS

STANDARD CONSTRUCTION DETAILS

SANITARY SEWER

DATE: APRIL, 2005

SHEET STD–20_R