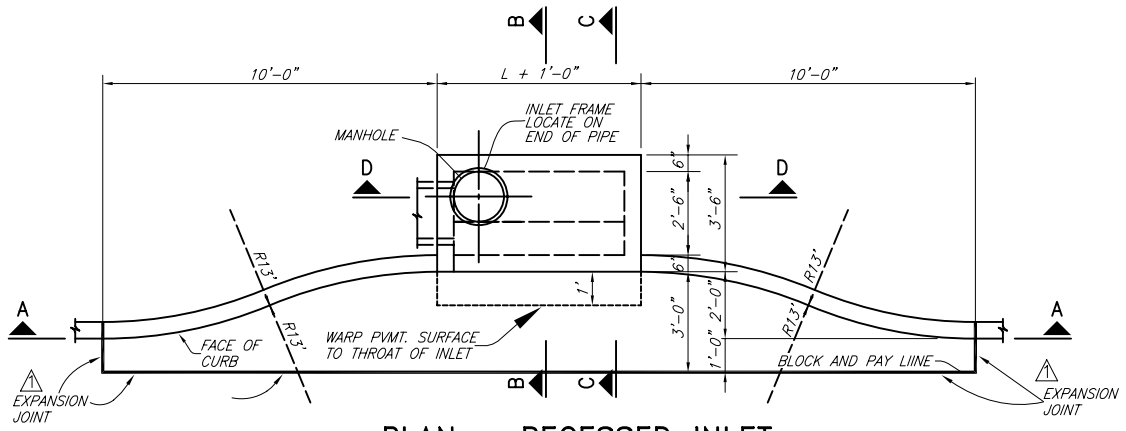

PLAN – RECESSED INLET

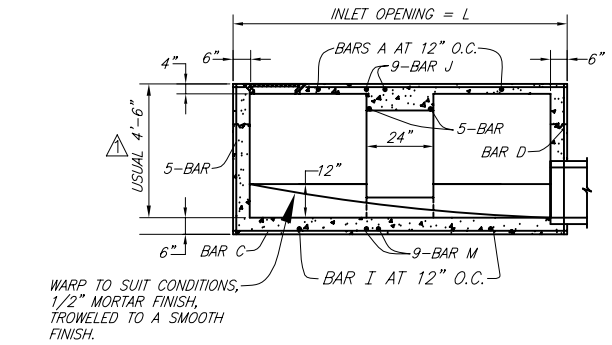

SECTION D–D – STANDARD AND RECESSED INLETS

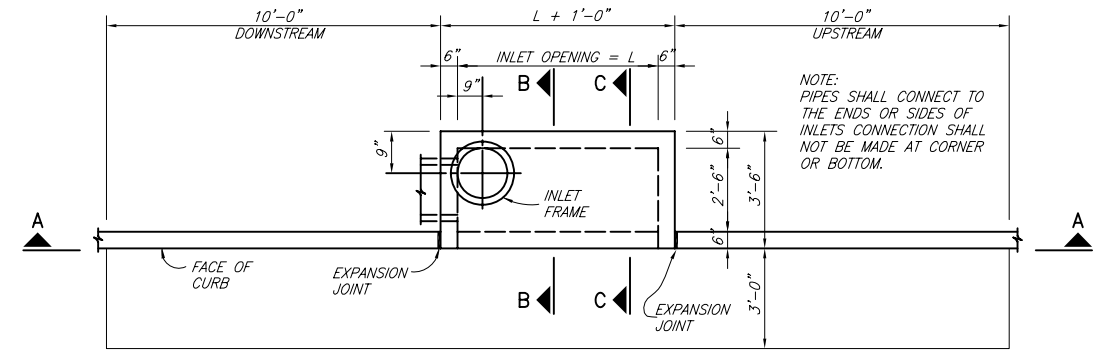

PLAN – STANDARD INLET

4, 6, 8 AND 10 FOOT INLETS

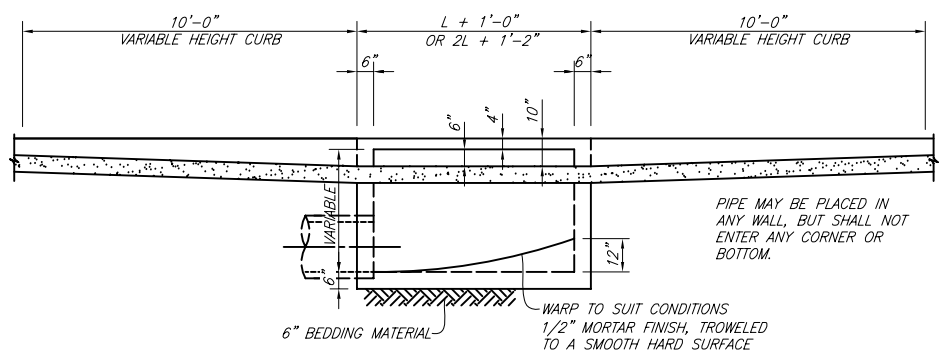

SECTION A–A–RECESSED AND STANDARD INLETS

4, 6, 8, AND 10 FOOT INLETS

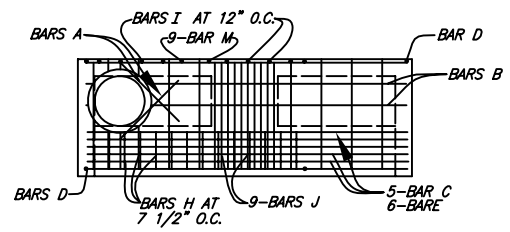

PLAN – STANDARD INLET

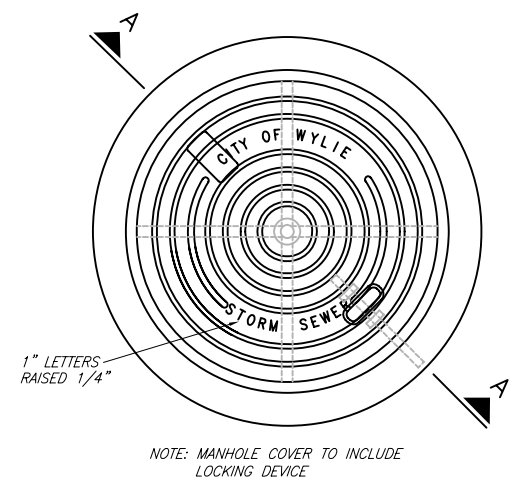

NOTE: MANHOLE COVER TO INCLUDE LOCKING DEVICE

PLAN OF COVER

REINFORCING STEEL SCHEDULE

DIMENSIONS SHOWN ARE FOR MAXIMUM SIZE INLETS

INLET LENGTH	BAR TYPE	BAR DIA. (1/8 IN.)	NO. REQ'D	BAR DIMENSIONS		
				A	B	C
4	A	3	6	3'–2"	0'–3"	–
	B	3	1	2'–10"	–	–
	C	4	15	4'–8"	0'–6"	–
	D	4	5	4'–8"	–	–
	F	4	1	3'–2"	–	–
	G	3	5	2'–0"	1'–3"	–
	H	3	6	*	*	*
	N	3	3	3'–2"	3'–2"	3'–2"
6	A	3	9	3'–2"	0'–3"	–
	B	3	1	4'–10"	–	–
	C	4	15	6'–8"	0'–6"	–
	D	4	5	4'–8"	–	–
	F	4	1	3'–2"	–	–
	G	3	5	2'–0"	1'–3"	–
	H	3	9	*	*	*
	N	3	3	3'–2"	3'–2"	3'–2"
8	A	3	12	3'–2"	0'–3'	–
	B	4	1	6'–10"	–	–
	C	4	15	8'–8"	0'–6"	–
	D	4	5	4'–8"	–	–
	F	4	1	3'–2"	–	–
	G	3	5	2'–0'	1'–3"	–
	H	3	12	*	*	*
	N	3	3	3'–2"	3'–2"	3'–2"
10	A	3	13	3'–2"	0'–3'	–
	B	3	2	8'–10"	–	–
	C	4	16	10'–8"	0'–6"	–
	D	4	4	4'–8"	–	–
	E	5	6	10'–8"	–	–
	G	3	5	2'–0"	1'–3"	–
	H	3	14	*	*	*
	I	4	8	4'–8"	3'–2"	3'–2"
	L	4	5	4'–3"	–	–

* SEE DIAGRAM FOR DIMENSIONS. 4', 6', 8' AND 10' INLETS

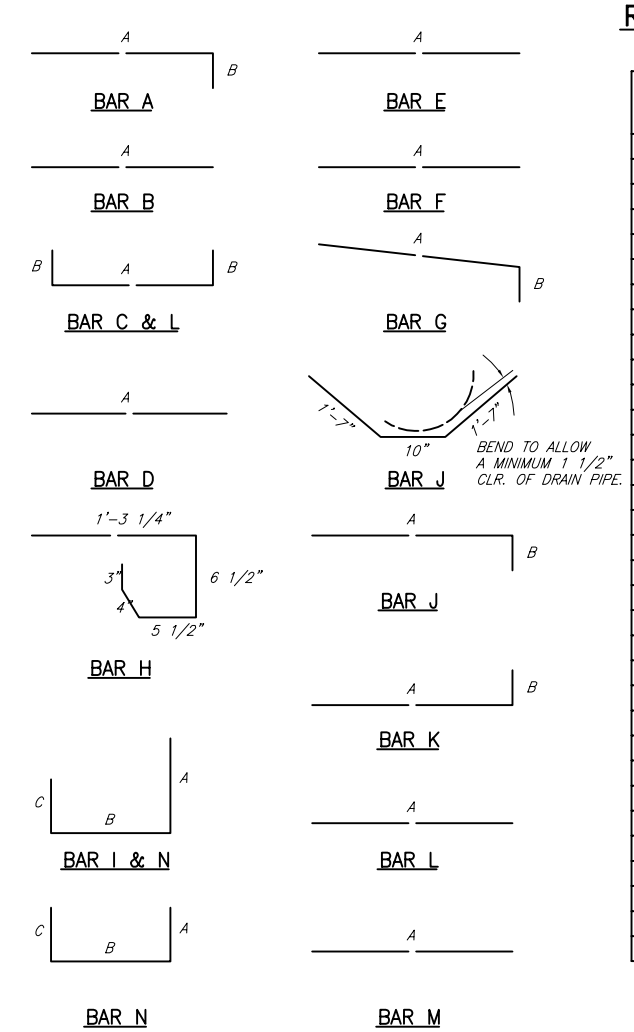

BAR DIAGRAMS

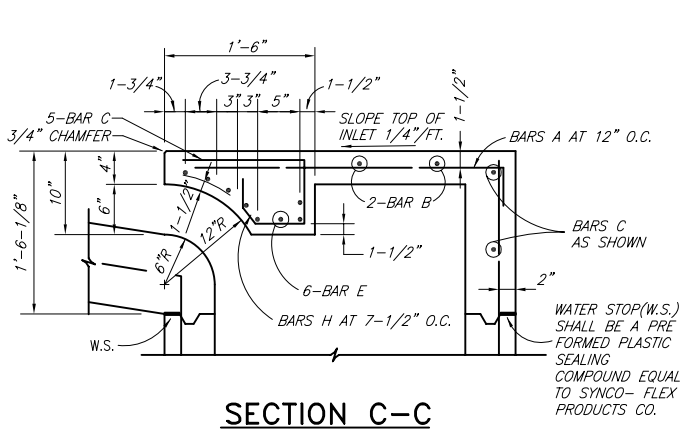

SECTION C–C

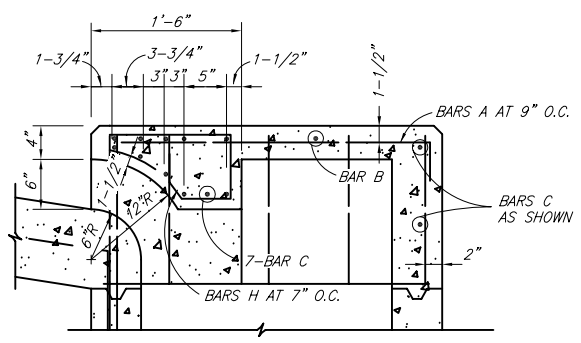

NOTE: FOR ADDITIONAL INFORMATION SEE SECTION C–C

SECTION E–E

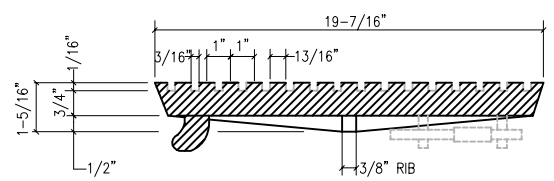

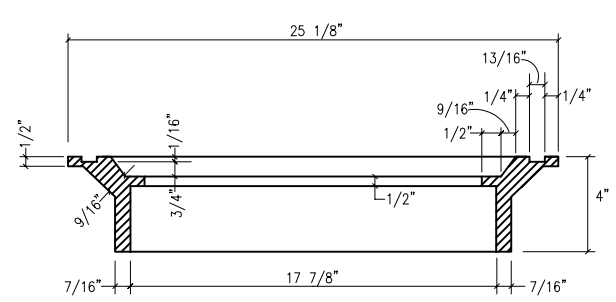

SECTION OF FRAME AND COVER SECTION A–A

INLET FRAME AND COVER

BASS & HAYS COVER 55#, FRAME 45# OR EQUAL

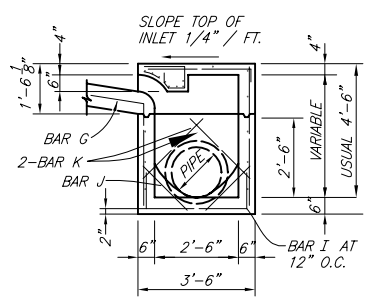

SECTION B–B

NOTES:

1. *THE FLOOR OF THE EXCAVATION FOR INLET BOX MUST PROVIDE A FIRM, LEVEL BED FOR THE BASE SECTION TO REST UPON.*
2. *A MINIMUM OF 6 INCHES OF 1" DIAMETER (MAXIMUM) ROCK OR GRAVEL SHALL BE USED TO PREPARE THE BEDDING TO FINAL GRADE OR LIEU OF THIS, AT LEAST 6 INCHES OF 2–SACK CEMENT STABILIZED SAND SHALL BE USED TO PREPARE THE BEDDING TO GRADE. CEMENT STABILIZED–SAND SHALL BE ALLOWED TO SET BY KEEPING HOLE PUMPED DRY.*
3. *AFTER CASING HAS BEEN INSTALLED ON THE PROPER BEDDING, THE BACKFILL MATERIAL, WHICH IS FREE FLOWING AND CLEAR OF ROCKS, IN EXCESS OF 4" DIAMETER AND OTHER LUMPS WHICH WOULD PROHIBIT PROPER COMPACTION, SHALL BE COMMENCED IN LIFTS OF NO MORE THAN 18". THE MATERIAL USED FOR BACKFILL SHOULD BE A TYPE SUITABLE TO OBTAIN THE DENSITY REQUIREMENTS FOR THE SPECIFIC JOB.*

NO.	REVISION	BY	DATE
1	REVISE INLET DEPTH, ADD EXPANSION JOINT	JCH	03/23/06

CITY OF WYLIE, TEXAS

STANDARD CONSTRUCTION DETAILS

STORM SEWER / INLET

DATE: APRIL, 2005

SHEET STD–09_R