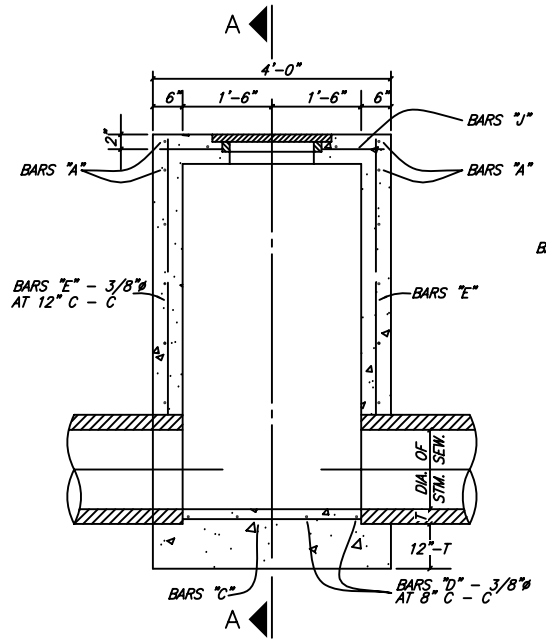

ELEVATION

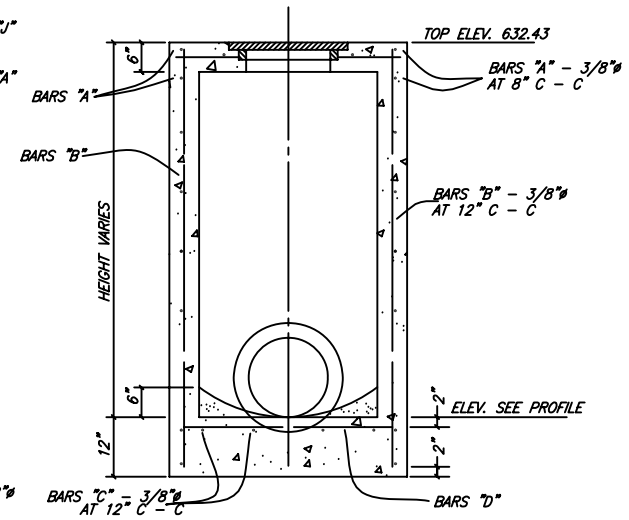

SECTION A–A

STORM SEWER TYPE A MANHOLE

MAX. PIPE SIZE 30"

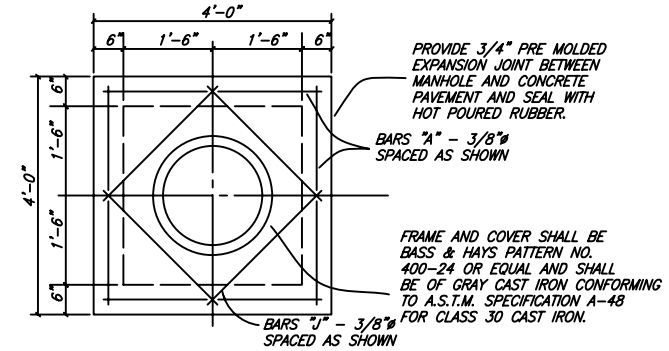

TOP PLAN
TYPE A & TYPE B
STORM SEWER MANHOLE

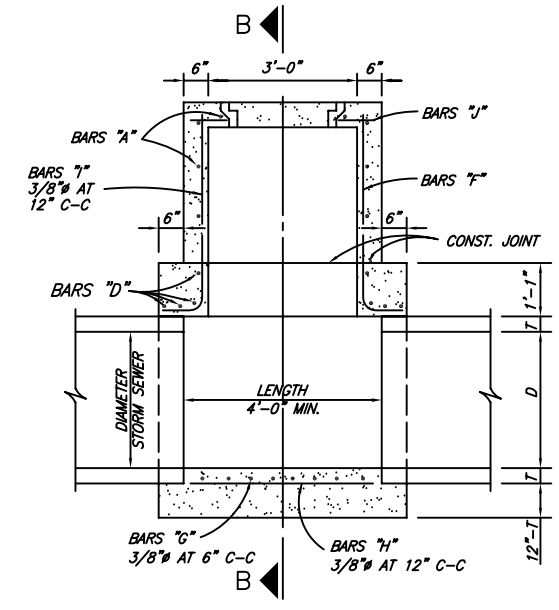

ELEVATION

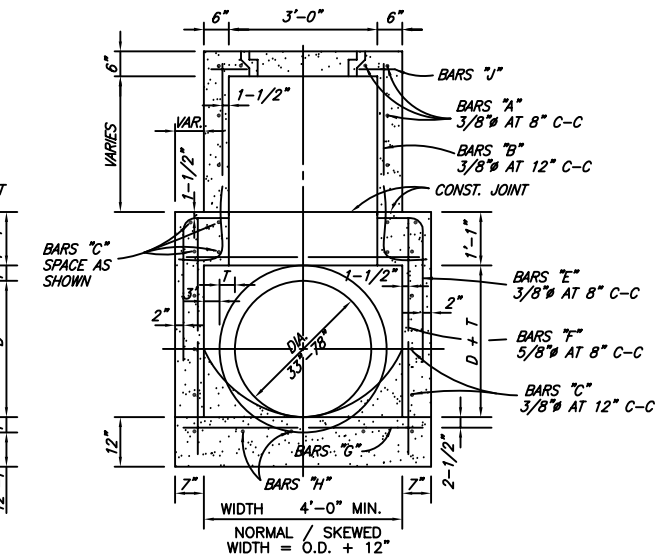

SECTION B–B

TYPE B STORM SEWER MANHOLE

MAX. PIPE SIZE 78"

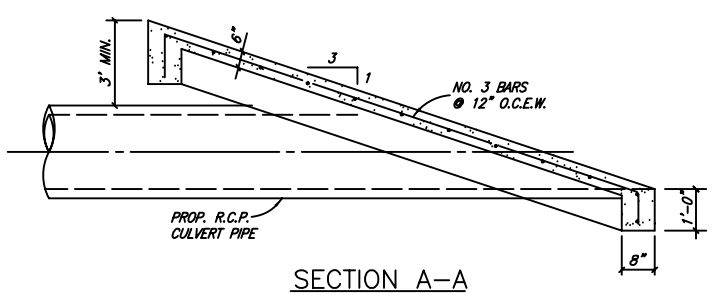

SECTION A–A

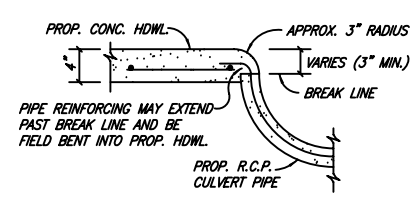

SECTION B–B

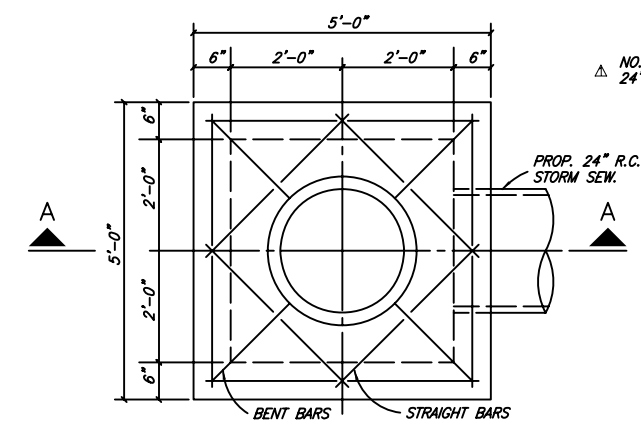

PLAN

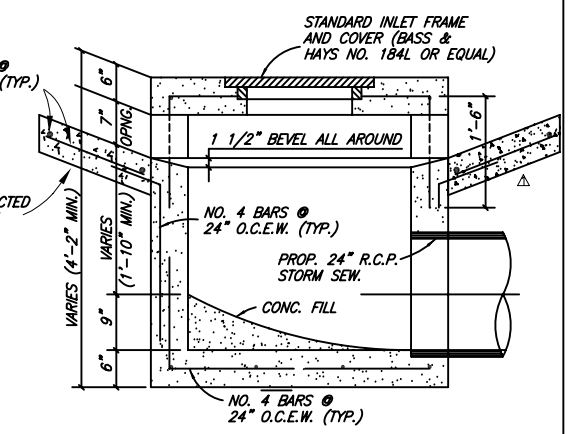

SECTION A–A

STANDARD DROP INLET

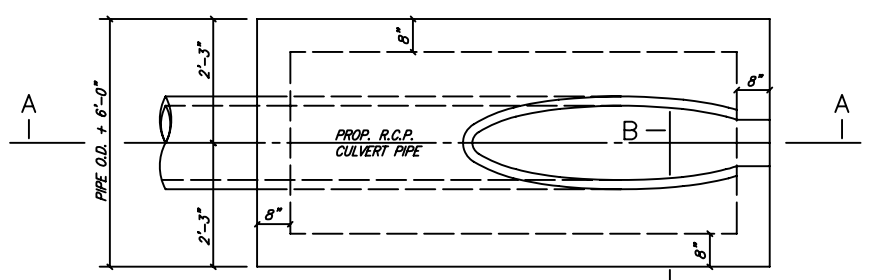

PLAN B

SLOPED CONCRETE HEADWALL

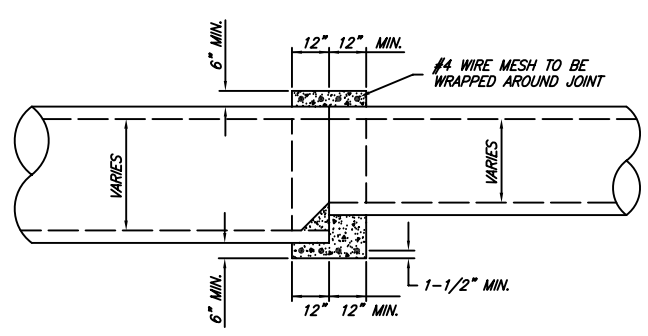

DETAIL OF CONCRETE COLLAR
FOR R.C.P. OR R.C.A.P. CONNECTIONS

INSIDE JOINT SHALL BE CONCRETE MORTAR

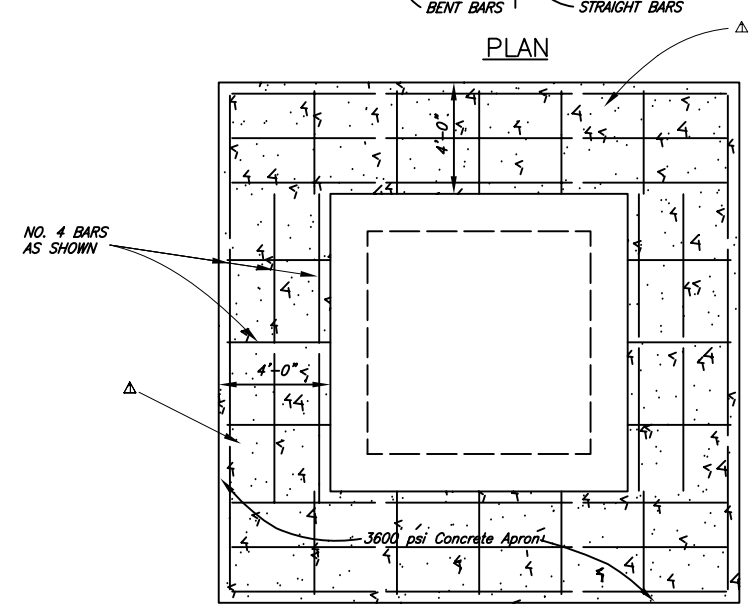

STANDARD DROP INLET APRON

NO.	REVISION	BY	DATE
1	REVISE DROP INLET–ADD CONC. APRON	JCH	03/08/06

CITY OF WYLIE, TEXAS

STANDARD CONSTRUCTION DETAILS

STORM SEWER / INLET / DETAILS

DATE: APRIL, 2005

SHEET STD–11_R