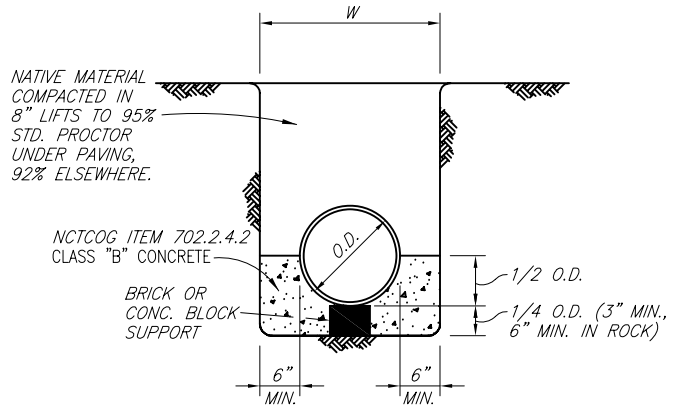

CLASS A EMBEDMENT

CONCRETE CRADLE

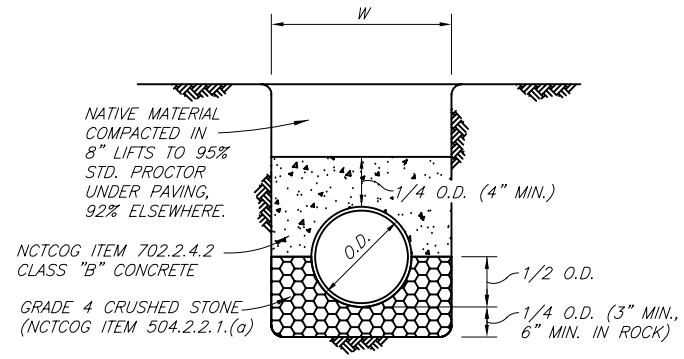

CLASS A-1 EMBEDMENT

CONCRETE CAP

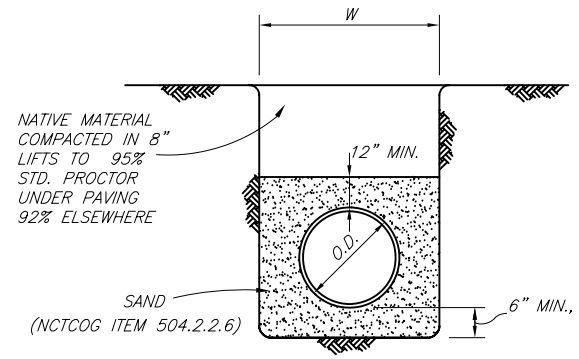

CLASS B+ EMBEDMENT

STD PVC WATER

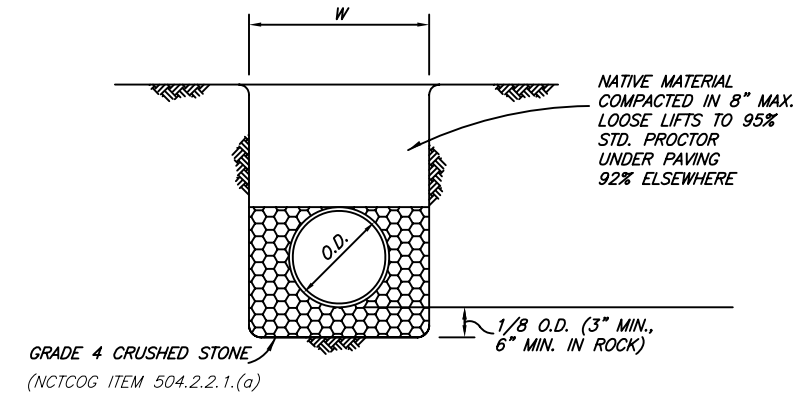

CLASS C EMBEDMENT

STD. DUCTILE IRON WATER OR SEWER
STD. R.C.C.P. WATER
STD. STORM SEWER

TRENCH WIDTH

NOTE:

W=MINIMUM 16" GREATER THAN PIPE O.D.
MAXIMUM 36" GREATER THAN PIPE O.D.

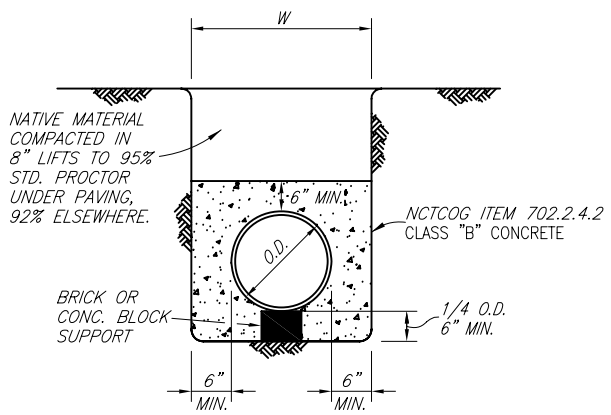

CLASS G EMBEDMENT

CONCRETE ENCASEMENT

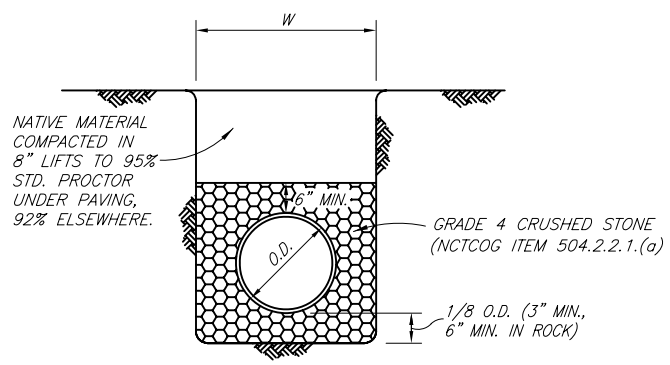

CLASS H EMBEDMENT

P.V.C. PIPE ONLY
STD. P.V.C. SEWER

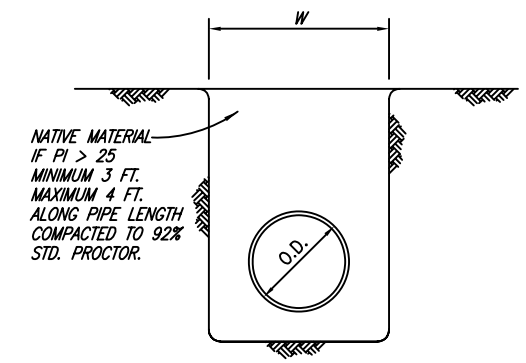

NOTE:
PLACE ONE CLAY COLLAR AT THE MIDPOINT BETWEEN ANY TWO MAIN LINE VALVES.

SEEPAGE BARRIER/CLAY COLLAR

WATER MAINS

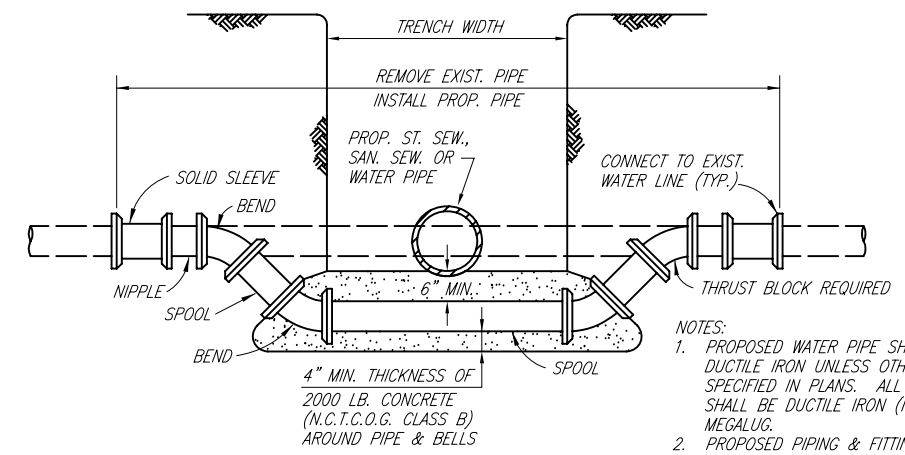

WATER MAIN LOWERING

NOTES:

1. PROPOSED WATER PIPE SHALL BE DUCTILE IRON UNLESS OTHERWISE SPECIFIED IN PLANS. ALL FITTINGS SHALL BE DUCTILE IRON (M.J.-P.E.) MEGALUG.
2. PROPOSED PIPING & FITTINGS ARE SYMMETRIC ABOUT CENTER OF PROP. SAN. SEW. OR ST. SEW. PIPE AND SHALL RETAIN TEST PRESSURES.
3. ALL THRUST BLOCKING SHALL BE SUBSIDIARY TO UNIT PRICE.
4. CROSSING OF SANITARY SEWER SHALL BE IN ACCORDANCE WITH T.C.E.Q. REQUIREMENTS.

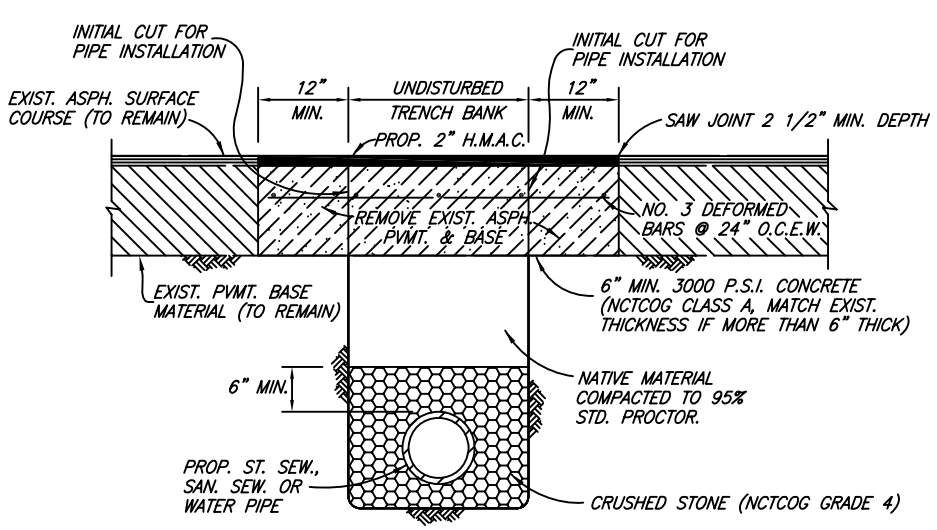

ASPHALT STREET OR DRIVEWAY REPAIR

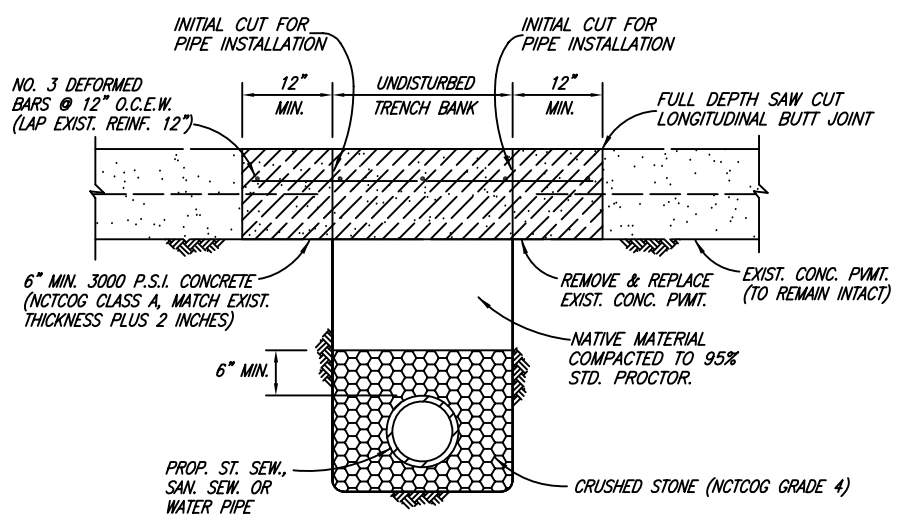

CONCRETE STREET OR DRIVEWAY REPAIR

GRADE 4 CRUSHED STONE GRADATION

SIEVE SIZE	% RETAINED
1-1/2 INCH	0
1 INCH	0-5
1/2 INCH	40-75
NO. 4	90-100
NO. 8	95-100

NO.	REVISION	BY	DATE
3	REVISE CLASS "C" EMBEDMENT	JCH	05/31/06
2	REVISE DENSITY FROM 90% TO 92% NOT UNDER PAVEMENT	JCH	03/08/06
1	REVISE CLASS B+ EMBEDMENT	JCH	10/21/05

CITY OF WYLIE, TEXAS

STANDARD CONSTRUCTION DETAILS

TYPICAL EMBEDMENTS

DATE: APRIL, 2005

SHEET STD-21_R