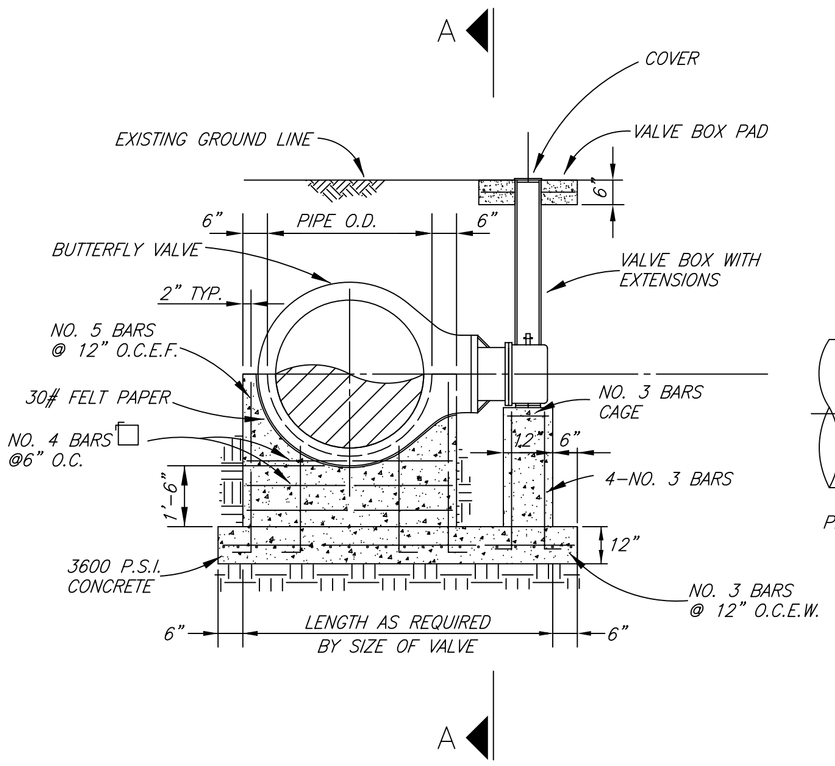

SECTION B-B

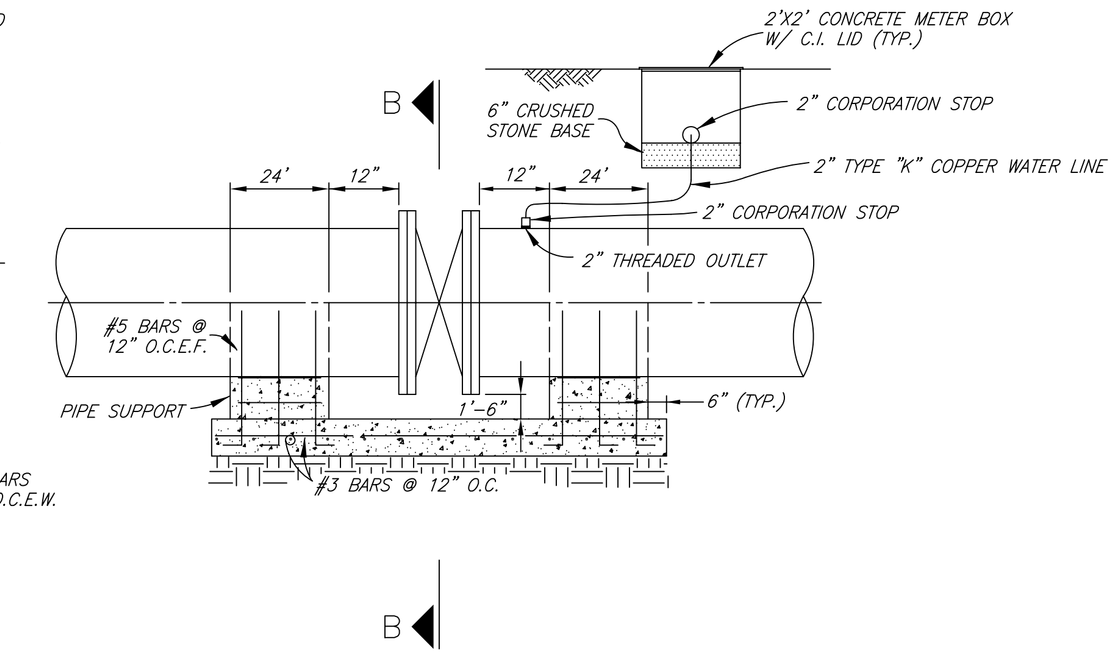

SECTION A-A

BUTTERFLY VALVE INSTALLATION

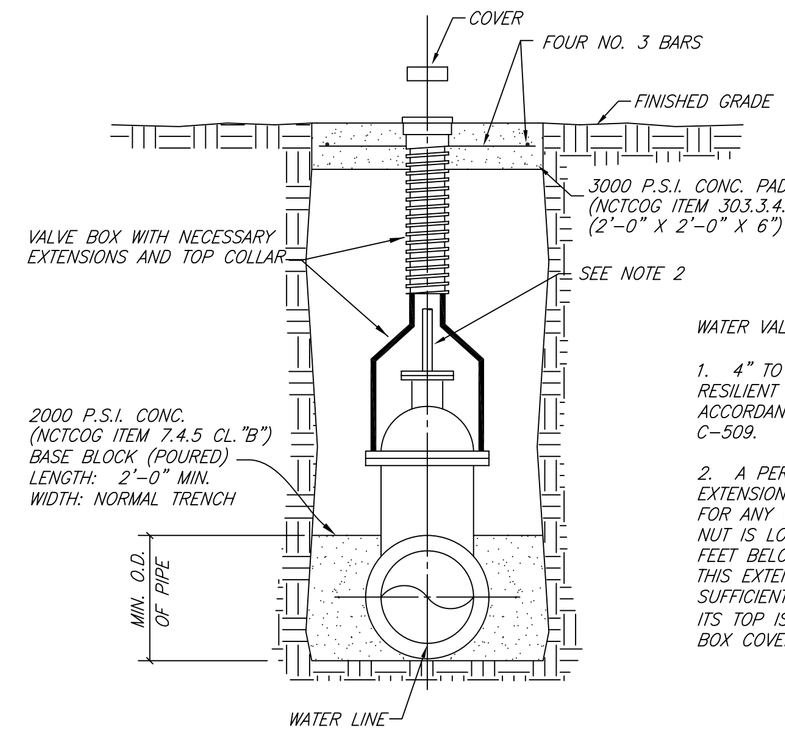

VALVE SETTING & BOX

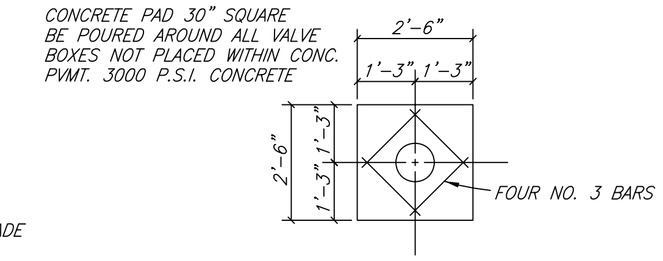

VALVE BOX PAD PLAN

WATER VALVE NOTES:

1. 4" TO 12" GATE VALVE SHALL BE RESILIENT SEATED WEDGE GATE VALVES ACCORDANCE WITH AWWA STANDARD C-509.

2. A PERMANENTLY ATTACHED VALVE EXTENSION STEM SHALL BE REQUIRED FOR ANY VALVE WHOSE OPERATING NUT IS LOCATED IN EXCESS OF 4 FEET BELOW THE TOP OF VALVE BOX. THIS EXTENSION SHALL BE OF SUFFICIENT LENGTH TO INSURE THAT ITS TOP IS WITHIN 4" OF THE VALVE BOX COVER.

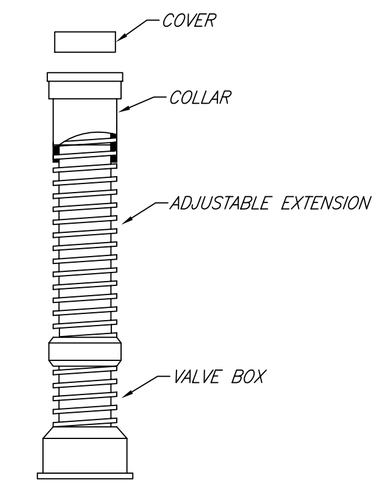

VALVE BOX WITH EXTENSION

GATE VALVE INSTALLATION

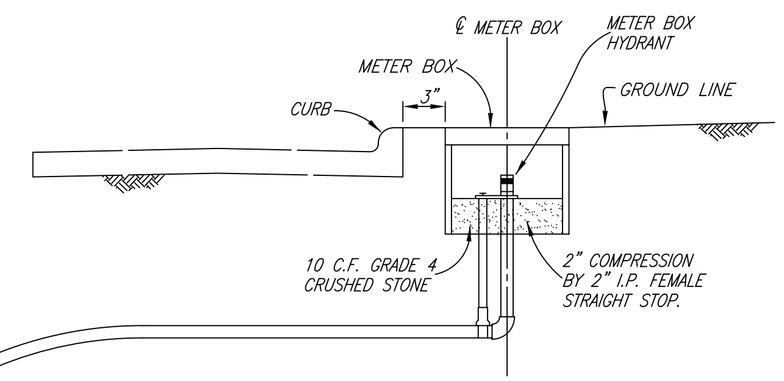

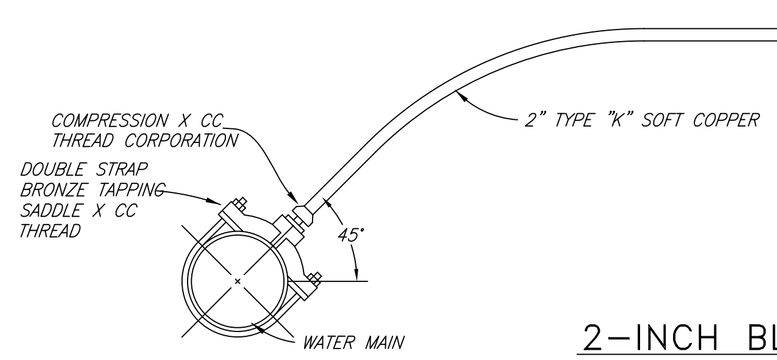

2-INCH BLOW OFF

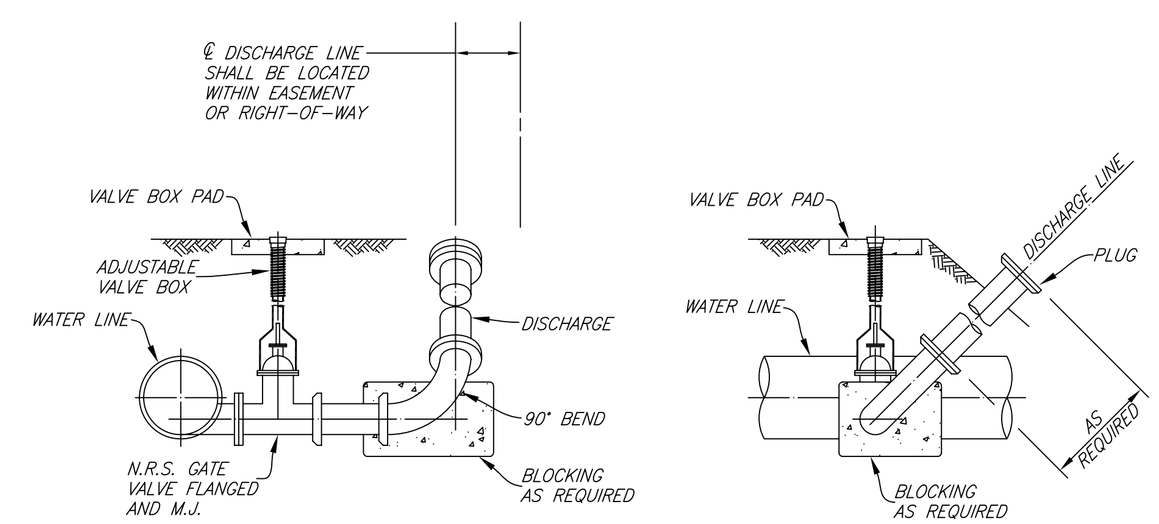

BLOW OFF VALVE

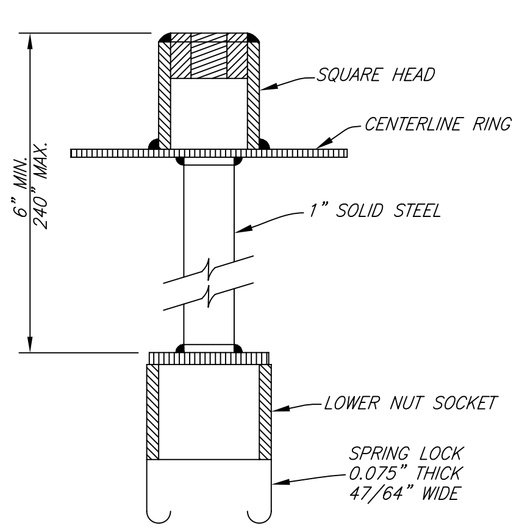

SPRING LOCK VALVE EXTENSION

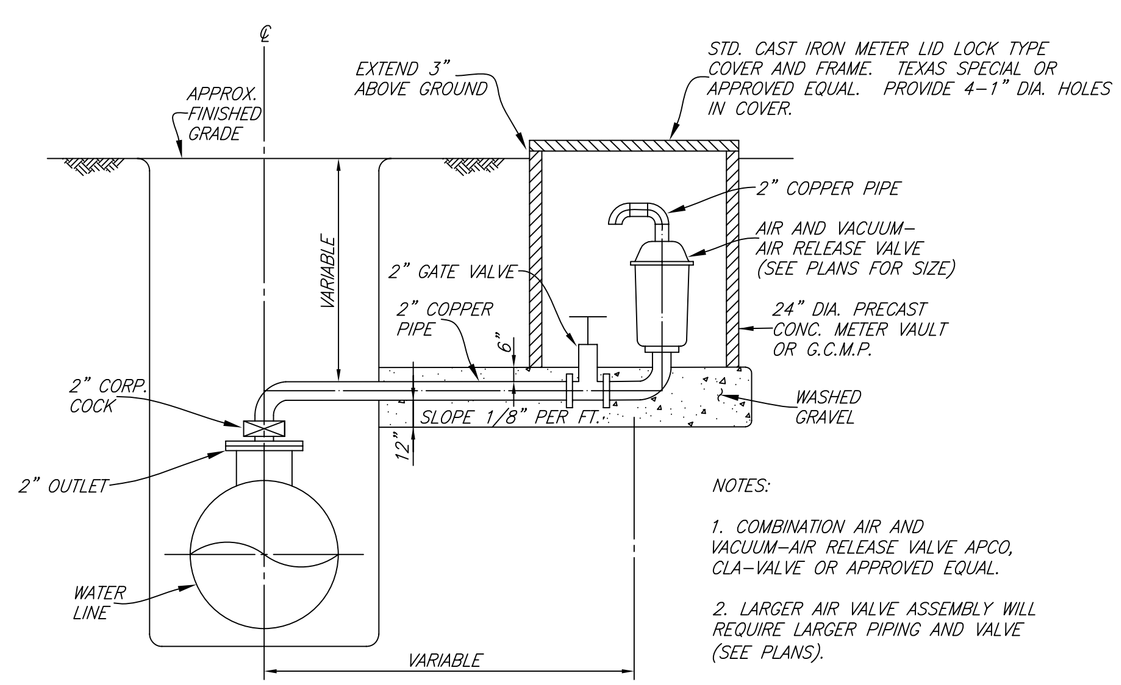

NOTES:

1. COMBINATION AIR AND VACUUM-AIR RELEASE VALVE APCO, CLA-VALVE OR APPROVED EQUAL.

2. LARGER AIR VALVE ASSEMBLY WILL REQUIRE LARGER PIPING AND VALVE (SEE PLANS).

AIR AND VACUUM - AIR RELEASE VALVE INSTALLATION

NO.	REVISION	BY	DATE

CITY OF WYLIE, TEXAS

STANDARD CONSTRUCTION DETAILS

WATER

DATE: APRIL, 2005

SHEET STD-15_R